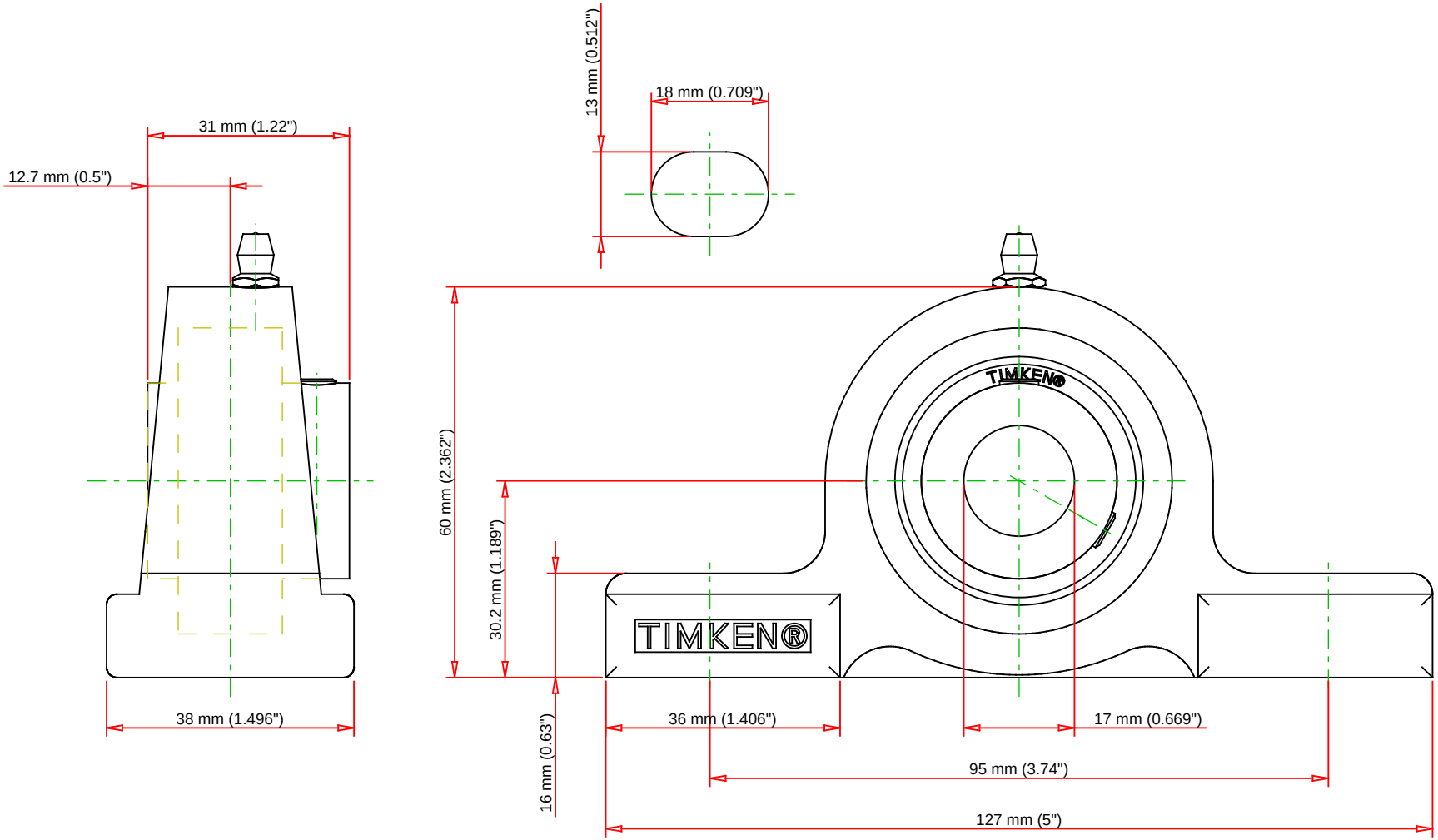

Bearing Number	UC203				
Load Ratings - C_r	2878	lbf	12800	N	
Load Ratings - C_{0r}	1495	lbf	6650	N	
Weight	1.3	lb	0.6	kg	
Bolt Size	M10				

TIMKEN®

THE TIMKEN COMPANY
NORTH CANTON, OHIO USA

UCP203

UCP 200 Pillow Block Mounted Bearings - Set Screw Locking

Every reasonable effort has been made to ensure the accuracy of the information contained in this writing, but no liability is accepted for errors, omissions or for any other reason.

FOR DISCUSSION ONLY